TILLUFTSAGGREGAT

FLEXLINE VVU-500E

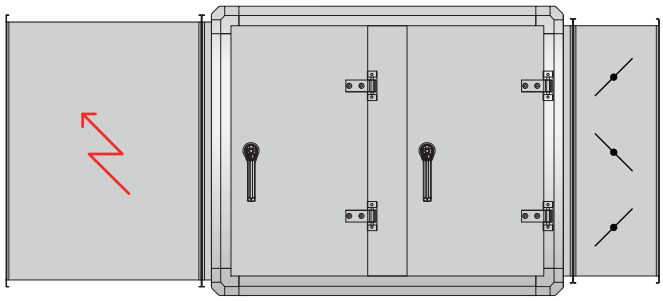

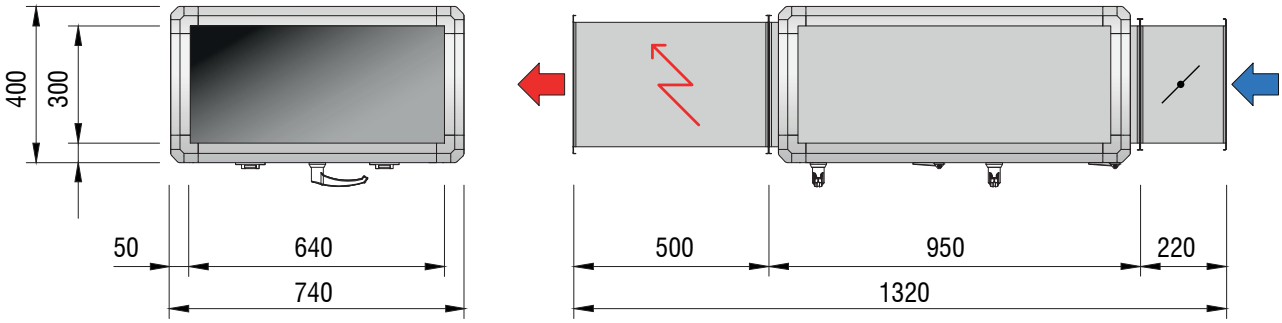

2310-VE1-Dampic